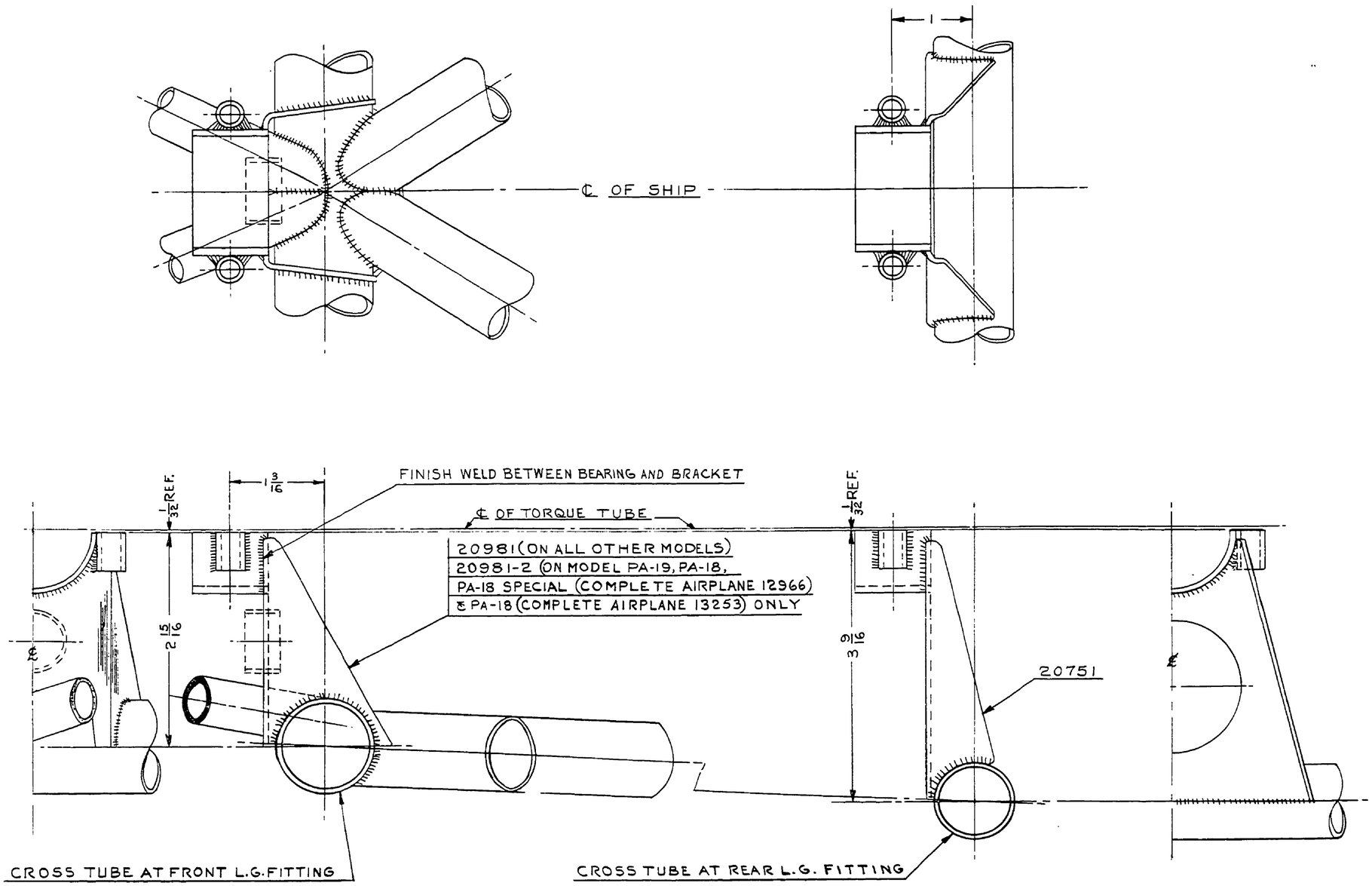

PART NO.	NO. REQ.	NAME	MATERIAL
20981-2	1	BRACKET ASS'Y.	ON MODEL PA-19, PA-18, PA-18 SPECIAL (COMPLETE AIRPLANE 12966) & PA-18 (COMPLETE AIRPLANE 13253)
20981		BRACKET ASS'Y	ON ALL OTHER MODELS
20751	1	BRACKET ASSY-REAR	

SCALE FULL SIZE — TOTAL WT.-LBS.

FINISH-PIPER SPECIFICATION #10

MANUFACTURING PRACTICES-PIPER SPECIFICATION #9

BEARING INSTALLATION — TORQUE TUBE LOWER

LET.	REVISION	DATE	BY
L	REDRAWN & REVISED	6-8-51	I.M.M.

THIS DRAWING IS THE PROPERTY OF THE PIPER AIRCRAFT CORP. AND ITS POSSESSION BY UNAUTHORIZED PERSONS SHALL NOT BE CONSTRUED AS PERMISSION TO REPRODUCE FOR SALE, IN WHOLE OR IN PART, ANY DEVICES SHOWN THEREON

MODEL	PER PLANE	NEXT ASSEMBLY	SUPERSEDES	SUP. BY

PIPER AIRCRAFT CORP.
LOCK HAVEN, PENNA.

DRAFTSMAN	CHECKER	STANDARDS
I.M.M. 6-8-51	H.R.K. 6-22-51	

20992

A797